pixhawk®

DS-020 Pixhawk Autopilot v6X-RT Standard

Revision: 0.4.0
Revision date: July 24, 2025

Abstract

This document is the formal version of the Pixhawk industry standard that includes all aspects of the hardware standard required to build compatible autopilots.

Table of contents

Table of contents 2
Document Revisions 3
Contact and Public Developer Call 4
Trademark Guideline 4
License and Disclaimer 4
Related Standards 5
FMUv6X-RT Summary 5
Overview 5
Detailed Block Diagram 6
Mechanical Design 8
Sensors Locations 11
Sensor Sets 12
Sensor Set (Rev 1) 12
FMU Sensor Set (Rev 1) 12
IMU Sensor Set (Rev 1) 12
Sensor Set (Rev 2) 13
FMU Sensor (Rev 2) 13
IMU Sensor Set (Rev 2) 13
Sensor Set (Rev 3) 14
FMU Sensor (Rev 3) 14
IMU Sensor Set (Rev 3) 14
IMU Pinout of FMUM's IMU connector (FMUvxX) 15
Full FMUv6X-RT Pinout 16
RT1062 Pinout 16
RT1175 Pinout 22

Document Revisions

Revision	Date	Editor	Reviewer	Comments
0.1.0	09/30/24	Ramón Roche	Gerald Peklar	Initial specification.
0.20	10/04/24	Jari Van Ewijk	Ramón Roche	Include diagrams and overall corrections on port assignments.
0.3.0	11/07/24	Ramón Roche	Jari Van Weijk	Include RT1175 & RT1062 Pinouts
0.4.0	07/24/25	Ramón Roche	Peter Van Der Perk	Include Sensor Set Rev 3

Contact and Public Developer Call

This standard is being developed on a public developer call.
For further questions, please contact the maintainer of the standard, rroche@linuxfoundation.org.

Trademark Guideline

Pixhawk is a registered trademark and is used to mark and protect the consistent use of this standard. The requirements for this are covered in this document: Trademark Guideline

License and Disclaimer

Copyright (c) 2024, Pixhawk Special Interests Group (SIG) of Dronecode Foundation. All rights reserved.

Redistribution and use in products, without modification, are permitted provided that the following conditions are met:

- The trademark shall only be used for compliant products and in combination with a signed adopter agreement.
- Implementations of the standard must be compliant with the full specification.
- A royalty-free, non-exclusive license is provided to adopters with a valid adopter agreement for schematics and drawings based on the standard documentation.

THIS SPECIFICATION IS PROVIDED BY THE COPYRIGHT HOLDERS AND CONTRIBUTORS "AS IS" AND ANY EXPRESS OR IMPLIED WARRANTIES, INCLUDING, BUT NOT LIMITED TO, THE IMPLIED WARRANTIES OF MERCHANTABILITY AND FITNESS FOR A PARTICULAR PURPOSE ARE DISCLAIMED. IN NO EVENT SHALL THE COPYRIGHT HOLDER OR CONTRIBUTORS BE LIABLE FOR ANY DIRECT, INDIRECT, INCIDENTAL, SPECIAL, EXEMPLARY, OR CONSEQUENTIAL DAMAGES (INCLUDING, BUT NOT LIMITED TO, PROCUREMENT OF SUBSTITUTE GOODS OR SERVICES; LOSS OF USE, DATA, OR PROFITS; OR BUSINESS INTERRUPTION) HOWEVER CAUSED AND ON ANY THEORY OF LIABILITY, WHETHER IN CONTRACT, STRICT LIABILITY,OR TORT (INCLUDING NEGLIGENCE OR OTHERWISE) ARISING IN ANY WAY OUT OF THE USE

Related Standards

- DS-009 Pixhawk Connector Standard
- DS-010 Pixhawk Autopilot Bus Standard
- DS-012 Pixhawk FMUv6X Standard

FMUv6X-RT Summary

Overview

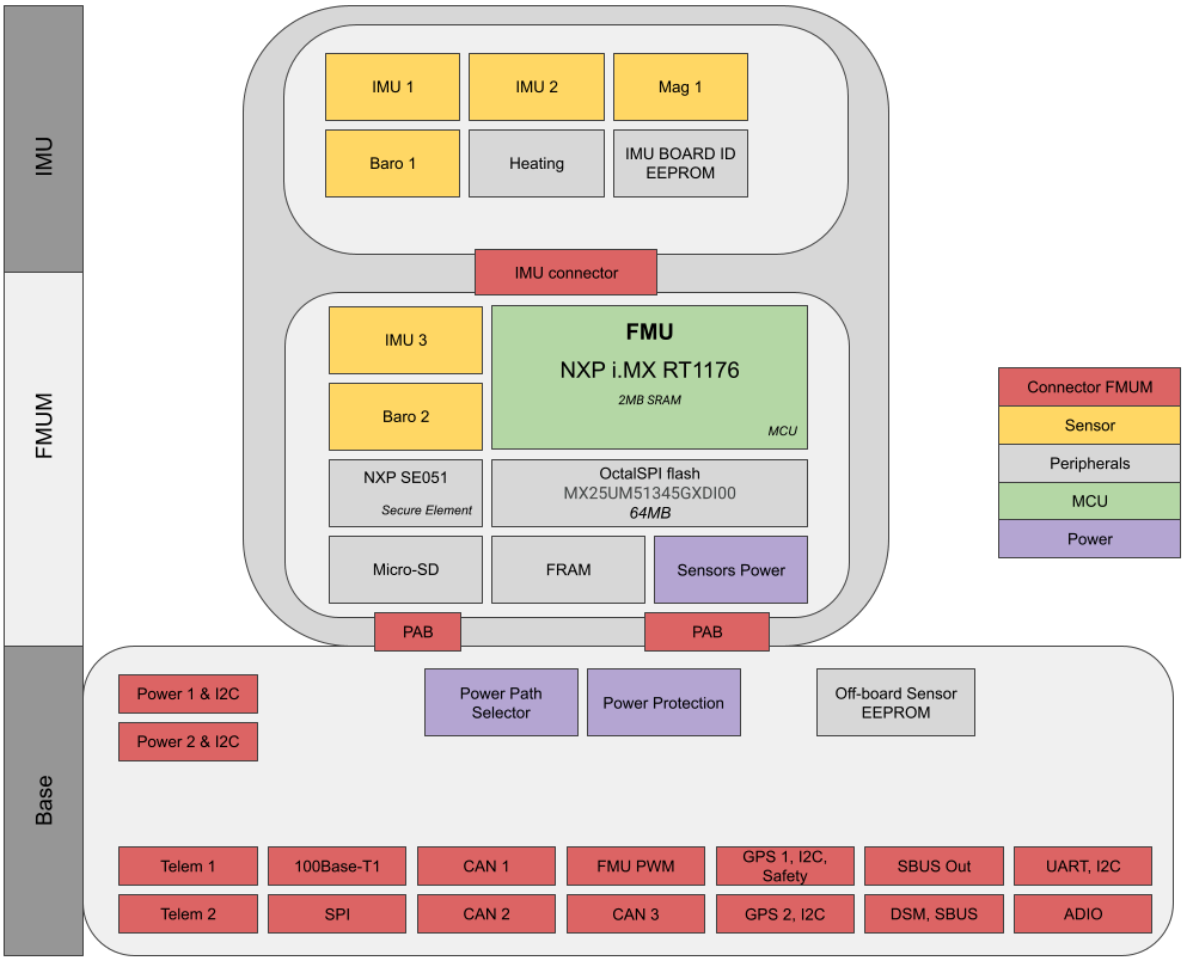

NOTE: FMUv6X-RT uses PAB standard v0.7.0 which uses previously reserved pins to extend functionality beyond what FMUv6X offers, and is based on NXP i.MX RT1176. The picture shows a baseboard taking advantage of the full I/O capabilities of PAB v0.7.0..

Detailed Block Diagram

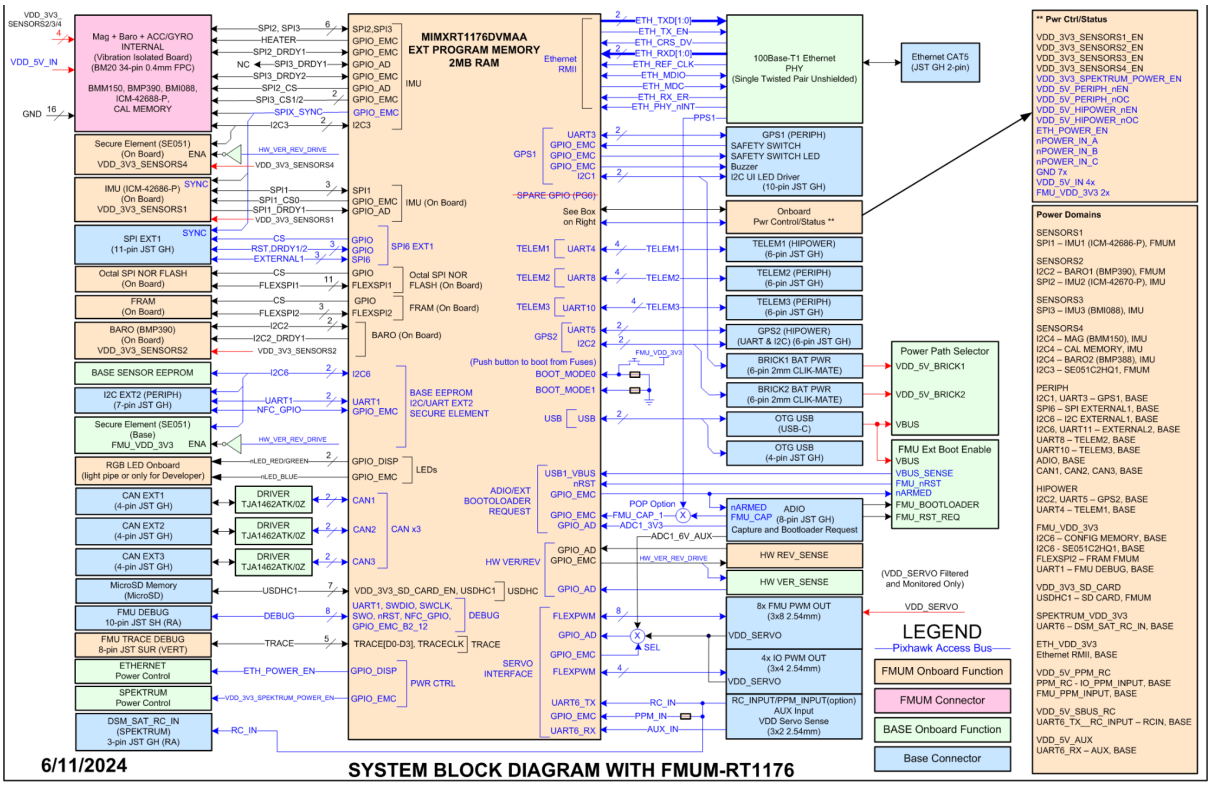

The FMUv6X-RT builds on top of the FMUv6X standard, replacing the MCU with an NXP Semiconductor IMX RT1176, with the same overall architectural benefits.

- Secure element for secure authentication of the drone (SE051, I2C3)
- Ethernet interface for high-speed mission computer integration
- Three redundancy domains: Completely isolated sensor domains with separate buses and separate power control.
- Redundant sensors on separate buses, allowing continuous operation while losing a complete redundancy domain.
    - Bosch BMI088 (TBC) (vibration isolated)
    - TDK InvenSense ICM-42688-P (TBC) (vibration isolated)
    - TDK InvenSense ICM-42686-P (TBC)
    - Bosch BMM150 compass
    - Bosch BMP390 pressure sensor
    - GPS external mag + baro #1
    - GPS external mag + baro #2
    - High accuracy barbed baro
    - Calibration EEPROM for baseboard sensors
    - On-IMU calibration EEPROM memory for high-accuracy sensors
- Automated sensor calibration eliminating varying signals and temperature
- Operating temperature 0 to +95°C
- FRAM memory for configuration data (FLEXSPI2)
- Extensive power monitoring

    - Two smart batteries on SMBus or more on UAVCAN / DroneCAN
    - 5V rail monitoring
    - 3.3V rail monitoring for CPU
    - 3.3V rail monitoring for each sensor domain
- External sensor bus (SPI6)
- Redundant power supply: The autopilot can be powered from up to three power sources and every sensor set is powered by an independent LDO with independent power control
- Battery-backed real time clock for running security applications without GPS coverage
- For NFC one external I2C port needs to have an additional GPIO line and 5V to supply the external NFC reader.

Mechanical Design

For mechanical compatibility across vendors the following is advised. Locate centers of Red, Green, and Blue LEDs and SD Card connector pin 1 as shown in the Top View FMUM above.

For mechanical case compatibility across vendors the following is advised. The outer case dimensions shall be **no greater than 31.8mm x 38.8mm**. This allows a total of 1.4mm to be used for case wall thickness and clearance to FMUM pcb. It is necessary to provide heat sinking of the FMUM microprocessor. This can be accomplished by using a metal top case that thermally interfaces to the FMUM microprocessor.

Top view of FMUM

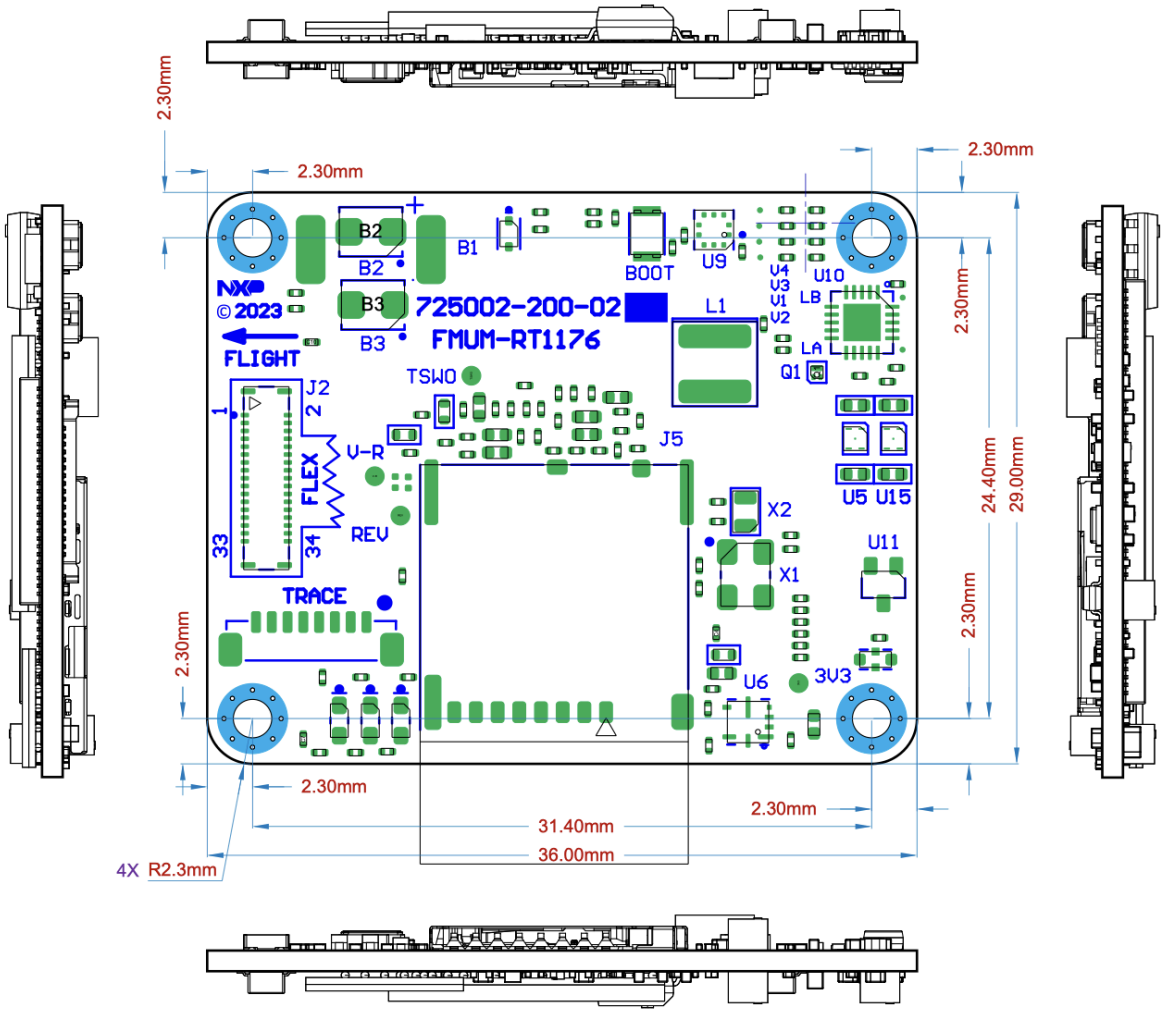

Bottom view of FMU SOM

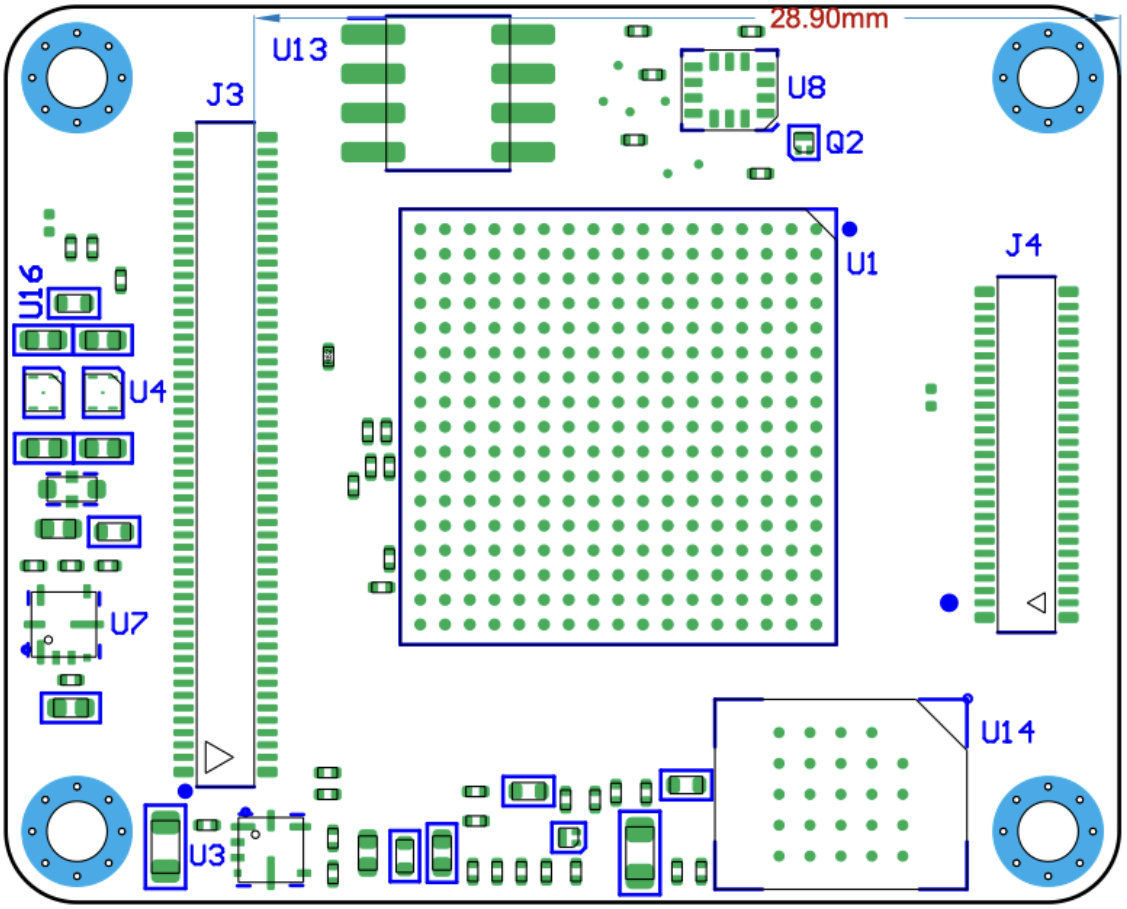

Side view of FMU SOM

View from Top side (Scale 4:1)

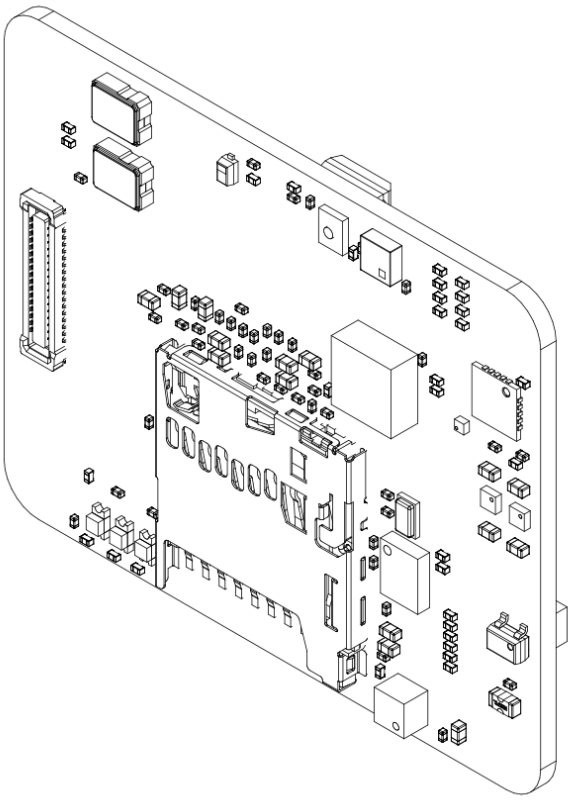

View from Bottom side (Scale 4:1)

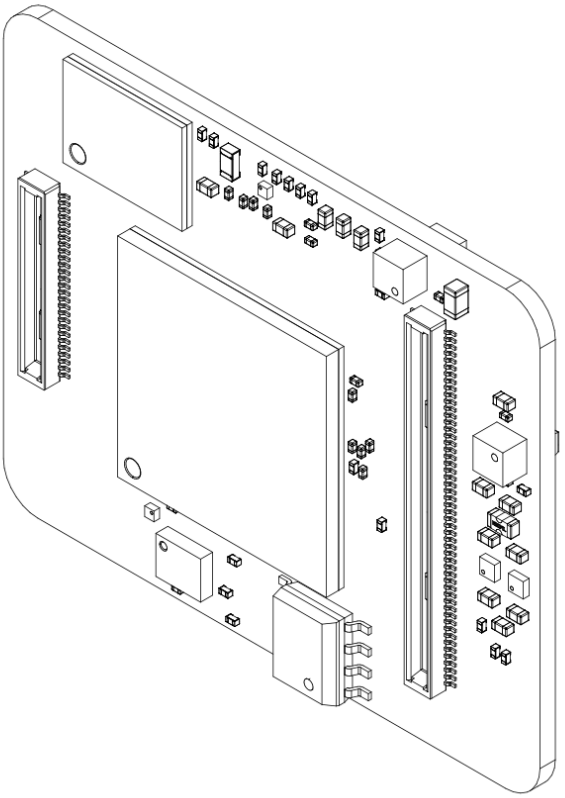

Sensors Locations

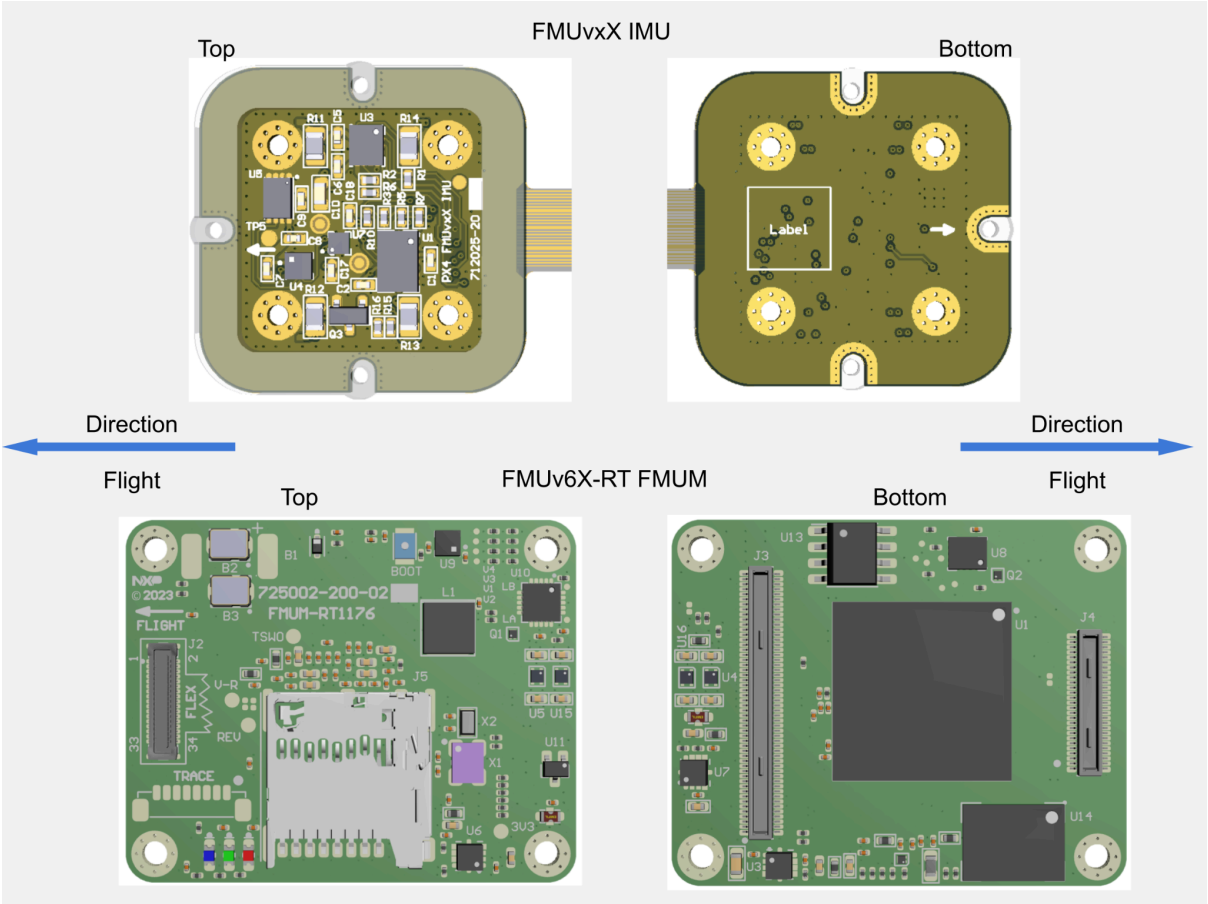

Sensor Sets

Sensor sets comprised an FMU set of sensors and an IMU set of sensors. These are revisioned in pairs. (Rev 1, Rev 2, Rev 3)

Sensor Set (Rev 1)

FMU Sensor Set (Rev 1)

FMU Board

Name	Sensor Type	Bus	Chip Select/ 7 Bit Addr	DRDY	Power Domain
U8 (IMU3)	ICM-42686-P	SPI1	CS0	DRDY1	1
U9 (BARO2)	BMP390	I2C2	0x76 @00=0x60	DRDY1	2
U9 (FRAM)	FM25V02A-GTR	FLEXSPI2	CS0	N/A	FMU VDD 3.3
U10 (SE)	SE051C2HQ1/Z01XDZ	I2C3	0x48	N/A	4

IMU Sensor Set (Rev 1)

IMU Board

Name	Sensor Type	Bus	Chip Select/ 7 Bit Addr	DRDY	Power Domain
U1 (IMU1)	BMI088 ACCEL	SPI3	CS1	N/A	3
U1 (IMU1)	BMI088 GYRO	SPI3	CS2	DRDY2	3
U2 (IMU2)	ICM-42688-P	SPI2	CS1	DRDY1	2
U4 (BARO1)	BMP390	I2C3	0x77 @00=0x60	N/A	4
U6	EEPROM	I2C4	0x50	N/A	4
U3 (MAG1)	BMM150	I2C4	0x10	N/A	4

Sensor Set (Rev 2)

FMU Sensor (Rev 2)

FMU Board

Name	Sensor Type	Bus	Chip Select/ 7 Bit Addr	DRDY	Power Domain
U8 (IMU3)	ICM-42686-P	SPI1	CS0	DRDY1	1
U9 (BARO2)	BMP390	I2C2	0x76 @00=0x60	DRDY1	2
U9 (FRAM)	FM25V02A-GTR	FLEXSPI2	CS0	N/A	FMU VDD 3.3
U10 (SE)	SE051C2HQ1/Z01XDZ	I2C3	0x48	N/A	4

IMU Sensor Set (Rev 2)

IMU Board

Name	Sensor Type	Bus	Chip Select/ 7 Bit Addr	DRDY	Power Domain
U1 (IMU1)	BMI088 ACCEL	SPI3	CS1	N/A	3
U1 (IMU1)	BMI088 GYRO	SPI3	CS2	DRDY2	3
U2 (IMU2)	ICM-42688-P	SPI2	CS1	DRDY1	2
U4 (BARO1)	BMP390	I2C3	0x77 @00=0x60	N/A	4
U6	EEPROM	I2C4	0x50	N/A	4
U5 (MAG1)	BMM350	I2C4	0x14	N/A	4

Sensor Set (Rev 3)

FMU Sensor (Rev 3)

FMU Board

Name	Sensor Type	Bus	Chip Select/ 7 Bit Addr	DRDY	Power Domain
U8 (IMU3)	ICM-45686	SPI1	CS0	DRDY1	1
U9 (BARO2)	BMP390	I2C2	0x76 @00=0x60	DRDY1	2
U9 (FRAM)	FM25V02A-GTR	FLEXSPI2	CS0	N/A	FMU VDD 3.3
U10 (SE)	SE051C2HQ1/Z01XDZ	I2C3	0x48	N/A	4

IMU Sensor Set (Rev 3)

IMU Board

Name	Sensor Type	Bus	Chip Select/ 7 Bit Addr	DRDY	Power Domain
U1 (IMU1)	BMI088 ACCEL	SPI3	CS1	N/A	3
U1 (IMU1)	BMI088 GYRO	SPI3	CS2	DRDY2	3
U2 (IMU2)	ICM-45686	SPI2	CS1	DRDY1	2
U4 (BARO1)	BMP390	I2C3	0x77 @00=0x60	N/A	4
U6	EEPROM	I2C4	0x50	N/A	4
U5 (MAG1)	BMM350	I2C4	0x14	N/A	4

Note: When referring to the pinout chart the CS Names are formed by BUS**n**_CS**n**_DEVICE: SPI**1**_nCS**1**_ICM20602
DRDY Names are formed by BUS**n**_DRDY**n**_DEVICE_INT**n**: SPI**2**_DRDY**2**_ISM330_INT**2**

Note: device names may reflect legacy devices names. What matters is the BUSn,CSn,DRDYn and the INTn.

IMU Pinout of FMUM's IMU connector (FMUvxX)

The signal's name device type (I.E BMI088_xxx) are for reference only. See Sensor Sets for the devices located on a designated bus.

Pin 1 location and direction of flex cable can be seen in FMUv6X Sensors Locations section.

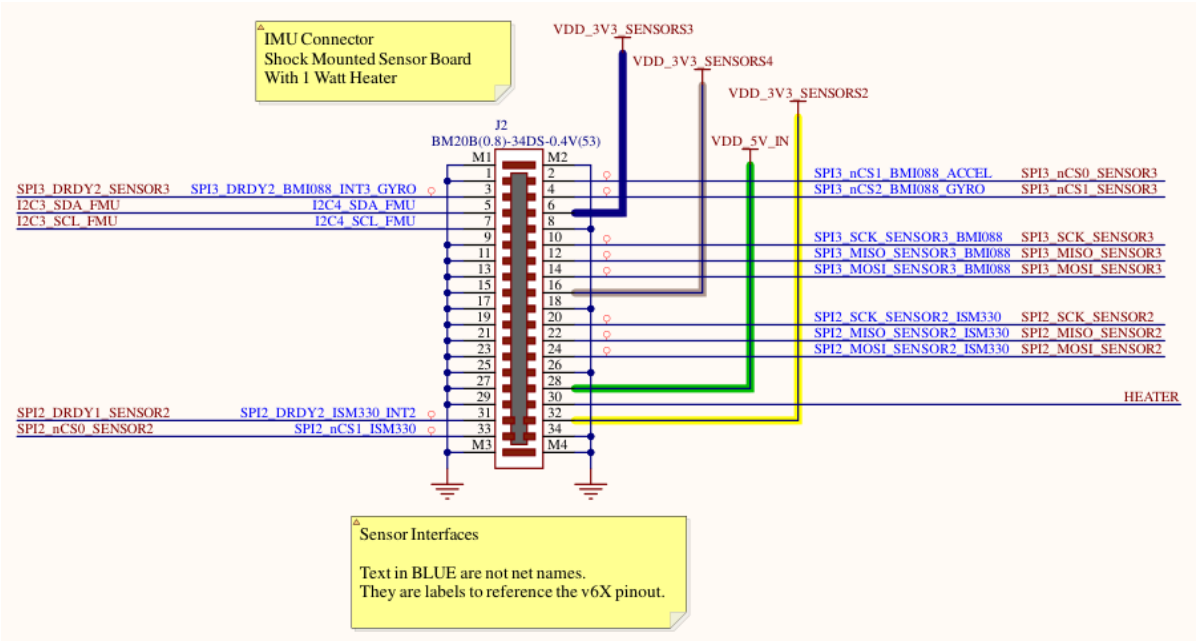

Full FMUv6X-RT Pinout

The official pinout is covered in this pinout sheet for overview tables click the links below.

- RT1062 Pinout Table
- RT1175 Pinout Table

RT1062 Pinout

J13	GPIO_AD_B1_11	SCALED_VDD_3V3_SENSORS1	ADC1_IN0
E11	GPIO_B0_15	ETH_REF_CLK	ENET2_REF_CLK + SRC_BT_CFG11
E7	GPIO_B0_01	ETH_MDIO	ENET2_MDIO
A2	GPIO_EMC_27	SPI1_SCK_SENSOR1	LPSPI1_SCK
D12	GPIO_B1_05	SPI4_MISO_EXTERNAL1	LPSPI4_SIN
D11	GPIO_B1_03	ETH_CRS_DV	ENET2_RX_EN
F1	GPIO_EMC_22	I2C3_SCL_EXTERNAL3	LPI2C3_SCL
N6	USB_OTG1_VBUS	VBUS	USB_OTG1_VBUS
A7	GPIO_EMC_40	SPI2_DRDY1	GPT2_CAPTURE2
M8	USB_OTG1_DN	USB_D_N	USB_OTG1_DN
L8	USB_OTG1_DP	USB_D_P	USB_OTG1_DP
E14	GPIO_AD_B0_06	FMU_SWDIO	SWD_DIO
F12	GPIO_AD_B0_07	FMU_SWCLK	SWD_CLK
K12	GPIO_AD_B1_05	SCALED_V5	ADC1_IN10
G12	GPIO_AD_B1_14	SPI3_MOSI_SENSOR2	LPSPI3_SOUT
B12	GPIO_B1_07	SPI4_SCK_EXTERNAL1	LPSPI4_SCK (no TRACESWO)
J2	GPIO_SD_B0_05	USDHC1_DATA3	USDHC1_DATA3
D1	GPIO_EMC_28	SPI1_MOSI_SENSOR1	LPSPI1_SOUT
L11	GPIO_AD_B1_02	UART2_TX_GPS1	LPUART2_TXD
M12	GPIO_AD_B1_03	UART2_RX_GPS1	LPUART2_RXD
J11	GPIO_AD_B1_00	I2C1_SCL_GPS1	LPI2C1_SCL
K11	GPIO_AD_B1_01	I2C1_SDA_GPS1	LPI2C1_SDA
A13	GPIO_B1_09	HEATER	TMR2_TIMER3
E10	GPIO_B0_14	ETH_TX_EN	ENET2_TX_EN + SRC_BT_CFG10
G11	GPIO_AD_B0_03	CAN2_RX	FLEXCAN2_RX
M11	GPIO_AD_B0_02	CAN2_TX	FLEXCAN2_TX
J1	GPIO_SD_B0_02	USDHC1_DATA0	USDHC1_DATA0
K1	GPIO_SD_B0_03	USDHC1_DATA1	USDHC1_DATA1
L7	PMIC_STBY_REQ	NFC_GPIO	GPIO5_IO02
D7	GPIO_B0_00	ETH_MDC	ENET2_MDC
L10	GPIO_AD_B0_15	ADC1_6V6	ADC1_IN4

M13	GPIO_AD_B1_09	ADC1_3V3	ADC1_IN14
B11	GPIO_B1_01	ETH_RXD0	ENET2_RDATA0
C11	GPIO_B1_02	ETH_RXD1	ENET2_RDATA1
D2	GPIO_EMC_25	UART6_TX_TO_IO__RC_INPUT	LPUART6_TXD
B3	GPIO_EMC_26	UART6_RX_FROM_IO__NC	LPUART6_RXD
B2	GPIO_EMC_18	UART4_RTS_TELEM2	LPUART4_RTS_B
A4	GPIO_EMC_17	UART4_CTS_TELEM2	LPUART4_CTS_B
J14	GPIO_AD_B1_15	SPI3_SCK_SENSOR2	LPSPI3_SCK
H11	GPIO_AD_B1_13	SPI3_MISO_SENSOR2	LPSPI3_SIN
B4	GPIO_EMC_19	UART4_TX_TELEM2	LPUART4_TXD
A6	GPIO_EMC_13	VDD_3V3_SD_CARD_EN	GPIO4_IO13
N9	RTC_XTALI	RTC_XTALI	RTC_XTALI
P9	RTC_XTALO	RTC_XTALO	RTC_XTALO
D8	GPIO_B0_03	CAN1_RX	FLEXCAN1_RX
H13	GPIO_AD_B1_08	CAN1_TX	FLEXCAN1_TX
A3	GPIO_EMC_20	UART4_RX_TELEM2	LPUART4_RXD
J3	GPIO_SD_B0_01	USDHC1_CLK	USDHC1_CLK
J4	GPIO_SD_B0_00	USDHC1_CMD	USDHC1_CMD
C5	GPIO_EMC_31	UART7_TX_DEBUG	LPUART7_TXD
D5	GPIO_EMC_32	UART7_RX_DEBUG	LPUART7_RXD
A12	GPIO_B1_08	FMU_nSAFETY_SWITCH_LED_OUT	GPIO2_IO24
E5	GPIO_EMC_35	SPI4_DRDY1_EXTERNAL1	GPIO3_IO21
C4	GPIO_EMC_33	FMU_CH5	FLEXPWM3_PWM2_A
C6	GPIO_EMC_30	FMU_CH6	FLEXPWM3_PWM0_B
B7	GPIO_EMC_39	UART8_RX_GPS2	LPUART8_RXD
D6	GPIO_EMC_38	UART8_TX_GPS2	LPUART8_TXD
D9	GPIO_B0_10	nLED_RED	GPIO2_IO10 + SRC_BT_CFG06 (no TRACED0)
A10	GPIO_B0_11	nLED_GREEN	GPIO2_IO11 + SRC_BT_CFG07 (no TRACED1)
C13	GPIO_B1_11	nLED_BLUE	GPIO2_IO27 (no TRACED2)
L6	WAKEUP	nARMED	GPIO5_IO00 (no TRACED3)
B9	GPIO_B0_08	UART3_TX_TELEM1	LPUART3_TXD + SRC_BT_CFG04
G5	GPIO_EMC_05	SPIX_SYNC	GPIO4_IO05?
B1	GPIO_EMC_15	UART3_CTS_TELEM1	LPUART3_CTS_B
A9	GPIO_B0_07	FMU_CAP1	TMR_TIMER1 + SRC_BT_CFG03 + ARM_TRACE3

E12	GPIO_B1_04	VDD_5V_PERIPH_nOC	GPIO2_IO20
B8	GPIO_B0_05	I2C2_SDA_UART8	LPI2C2_SDA + SRC_BT_CFG01 + ARM_TRACE1
C8	GPIO_B0_04	I2C2_SCL_UART8	LPI2C2_SCL + SRC_BT_CFG00 + ARM_TRACE0
H1	GPIO_EMC_12	SPI1_DRDY1_ICM20602	GPIO4_IO12
H12	GPIO_AD_B1_12	FMU_SAFETY_SWITCH_IN	GPIO1_IO28
C9	GPIO_B0_09	UART3_RX_TELEM1	LPUART3_RXD + SRC_BT_CFG05
D3	GPIO_EMC_24	UART3_GPIO_RTS_TELEM1	GPIO4_IO24
K10	GPIO_AD_B1_07	BUZZER_1	GPIO1_IO23?
G3	GPIO_EMC_11	SPI4_nRESET_EXTERNAL1	GPIO4_IO11
H5	GPIO_EMC_06	VDD_5V_HIPOWER_nOC	GPIO4_IO06
K14	GPIO_AD_B0_12	I2C4_SCL	LPI2C4_SCL
L14	GPIO_AD_B0_13	I2C4_SDA	LPI2C4_SDA
H10	GPIO_AD_B0_01	HW_VER_REV_DRIVE	GPIO1_IO01
B6	GPIO_EMC_14	nPOWER_IN_A	GPIO4_IO14
L13	GPIO_AD_B1_10	nPOWER_IN_B	GPIO1_IO26
H14	GPIO_AD_B0_14	nPOWER_IN_C	GPIO1_IO14
C2	GPIO_EMC_09	VDD_5V_PERIPH_nEN	GPIO4_IO09
C14	GPIO_B1_14	SPI4_nCS2_FRAM	GPIO2_IO30
E1	GPIO_EMC_29	SPI1_MISO_SENSOR1	LPSPI1_SIN
G13	GPIO_AD_B0_10	VDD_5V_HIPOWER_nEN	GPIO1_IO10
H2	GPIO_SD_B0_04	USDHC1_DATA2	USDHC1_DATA2
D10	GPIO_B0_13	ETH_TXD1	ENET2_TDATA1 + SRC_BT_CFG09 + ARM_TRACE_SWO
C10	GPIO_B0_12	ETH_TXD0	ENET2_TDATA0 + SRC_BT_CFG08 + ARM_TRACE_CLK
E8	GPIO_B0_02	SPI4_MOSI_EXTERNAL1	LPSPI4_SOUT
K7	PMIC_ON_REQ	ETH_POWER_EN	GPIO5_IO01
P11	XTALI	XTALI	XTALI
N11	XTALO	XTALO	XTALO
M14	GPIO_AD_B0_00	VDD_3V3_SPEKTRUM_POWER_EN	GPIO1_IO00
L12	GPIO_AD_B1_04	HW_VER_SENSE	ADC1_IN9

J12	GPIO_AD_B1_06	HW_REV_SENSE	ADC1_IN11
D4	GPIO_EMC_34	SPI2_nCS1	GPIO3_IO20
F2	GPIO_EMC_04	FMU_CH7	FLEXPWM4_PWM2_A
C1	GPIO_EMC_21	I2C3_SDA_EXTERNAL3	LPI2C3_SDA
F3	GPIO_EMC_01	FMU_CH8	FLEXPWM4_PWM0_B
F14	GPIO_AD_B0_09	FMU_CH4	FLEXPWM2_PWM3_A
G1	GPIO_EMC_10	FMU_CH3	FLEXPWM2_PWM2_A
H3	GPIO_EMC_08	FMU_CH2	FLEXPWM2_PWM1_A
G2	GPIO_EMC_23	UART5_TX	LPUART5_TXD
D14	GPIO_B1_13	UART5_RX	LPUART5_RXD
A8	GPIO_B0_06	FMU_CH1	FLEXPWM2_PWM0_A + SRC_BT_CFG02 + ARM_TRACE2
E3	GPIO_EMC_00	SPI2_SCK	LPSPI2_SCK
G4	GPIO_EMC_03	SPI2_MISO	LPSPI2_SIN
F4	GPIO_EMC_02	SPI2_MOSI	LPSPI2_SOUT
B14	GPIO_B1_15	SPI3_nCS1_BMI088_ACCEL	GPIO2_IO31
C12	GPIO_B1_06	FMU_PPM_INPUT	GPT1_CAPTURE2
A5	GPIO_EMC_16	SPI3_DRDY2_BMI088_INT3_GYRO	GPIO4_IO16
B13	GPIO_B1_10	SPI3_nCS2_BMI088_GYRO	GPIO2_IO26
E4	GPIO_EMC_37	SPI1_nCS1_ICM20602	GPIO3_IO23
H4	GPIO_EMC_07	SPI4_CS1_EXTERNAL1	GPIO4_IO07
C7	GPIO_EMC_41	VDD_3V3_SENSORS1_EN	GPIO3_IO27
F11	GPIO_AD_B0_04	BOOT_MODE0_OUT	SRC_BOOT_MODE00
G14	GPIO_AD_B0_05	BOOT_MODE1_OUT	SRC_BOOT_MODE01
F13	GPIO_AD_B0_08	NC_JTAG_MOD_PD	JTAG_MOD
G10	GPIO_AD_B0_11	CAN3_RX	FLEXCAN3_RX
A11	GPIO_B1_00	ETH_RX_ER	ENET2_RX_ER
D13	GPIO_B1_12	SD_CD_SW	USDHC1_CD_B / GPIO2_IO28
C3	GPIO_EMC_36	CAN3_TX	FLEXCAN3_TX
L5	GPIO_SD_B1_00	FLEXSPI_B_DATA3	FLEXSPI_B_DATA3
M5	GPIO_SD_B1_01	FLEXSPI_B_DATA2	FLEXSPI_B_DATA2
M3	GPIO_SD_B1_02	FLEXSPI_B_DATA1	FLEXSPI_B_DATA1
M4	GPIO_SD_B1_03	FLEXSPI_B_DATA0	FLEXSPI_B_DATA0
P2	GPIO_SD_B1_04	FLEXSPI_B_SCLK	FLEXSPI_B_SCLK
N3	GPIO_SD_B1_05	FLEXSPI_A_DQS	FLEXSPI_A_DQS
L3	GPIO_SD_B1_06	FLEXSPI_A_SS0_B	FLEXSPI_A_SS0_B
L4	GPIO_SD_B1_07	FLEXSPI_A_SCLK	FLEXSPI_A_SCLK
P3	GPIO_SD_B1_08	FLEXSPI_A_DATA0	FLEXSPI_A_DATA0
N4	GPIO_SD_B1_09	FLEXSPI_A_DATA1	FLEXSPI_A_DATA1
P4	GPIO_SD_B1_10	FLEXSPI_A_DATA2	FLEXSPI_A_DATA2

P5	GPIO_SD_B1_11	FLEXSPI_A_DATA3	FLEXSPI_A_DATA3
M7	POR_B	FMU_nRST	(power on reset)
M9	VDD_SNVS_IN	V_RTC_BAT	(3V power supply for SNVS domain)
F6	VDD_SOC_IN	VDD_SOC_IN	(1.3V power supply for digital core)
F7	VDD_SOC_IN	VDD_SOC_IN	(1.3V power supply for digital core)
F8	VDD_SOC_IN	VDD_SOC_IN	(1.3V power supply for digital core)
F9	VDD_SOC_IN	VDD_SOC_IN	(1.3V power supply for digital core)
G6	VDD_SOC_IN	VDD_SOC_IN	(1.3V power supply for digital core)
G9	VDD_SOC_IN	VDD_SOC_IN	(1.3V power supply for digital core)
H6	VDD_SOC_IN	VDD_SOC_IN	(1.3V power supply for digital core)
H9	VDD_SOC_IN	VDD_SOC_IN	(1.3V power supply for digital core)
J9	VDD_SOC_IN	VDD_SOC_IN	(1.3V power supply for digital core)
N14	VDDA_ADC_3P3	FMU_VDDA_3V3_FILT	(3.3V power supply for ADC)
J6	NVCC_SD0	FMU_VDD_3V3	(3.3V power supply for GPIO_SD_B0 bank - USDHC)
K8	VDD_USB_CAP	LDO_USB	(3.0V internal LDO output for USB PHY)
A1	VSS	GND	
A14	VSS	GND	
B5	VSS	GND	
B10	VSS	GND	
H8	VSS	GND	
J7	VSS	GND	
E2	VSS	GND	
E13	VSS	GND	

G7	VSS	GND	
G8	VSS	GND	
H7	VSS	GND	
J8	VSS	GND	
K2	VSS	GND	
K13	VSS	GND	
L9	VSS	GND	
N5	VSS	GND	
N8	VSS	GND	
P1	VSS	GND	
P14	VSS	GND	
P13	CCM_CLK1_N	(NC)	
N13	CCM_CLK1_P	(NC)	
N1	DCDC_GND	GND	
N2	DCDC_GND	GND	
L1	DCDC_IN	FMU_VDD_3V3	(3.3V power supply for internal DCDC converter)
L2	DCDC_IN	FMU_VDD_3V3	(3.3V power supply for internal DCDC converter)
K4	DCDC_IN_Q	FMU_VDD_3V3	(3.3V power supply for internal DCDC converter)
M1	DCDC_LP	VDD_SOC_IN	(1.3V internal DCDC converter output)
M2	DCDC_LP	VDD_SOC_IN	(1.3V internal DCDC converter output)
K3	DCDC_PSWITCH	FMU_VDD_3V3	(power switch for internal DCDC converter)

J5	DCDC_SENSE	VDD_SOC_IN	(1.3V internal DCDC converter sense feedback)
N10	GPANAIO	(NC)	
K9	NGND_KEL0	GND	
E6	NVCC_EMC	FMU_VDD_3V3	(3.3V power supply for GPIO_EMC bank)
F5	NVCC_EMC	FMU_VDD_3V3	(3.3V power supply for GPIO_EMC bank)
F10	NVCC_GPIO	FMU_VDD_3V3	(3.3V power supply for GPIO and GPIO_AD bank)
J10	NVCC_GPIO	FMU_VDD_3V3	(3.3V power supply for GPIO and GPIO_AD bank)
E9	NVCC_GPIO	FMU_VDD_3V3	(3.3V power supply for GPIO and GPIO_AD bank)
P10	NVCC_PLL	LDO_1P1	(1.1V internal LDO output for PLL, OSC)
K5	NVCC_SD1	VDD_1V8_FLASH	(1.8V power supply for GPIO_SD_B1 bank - HyperFlash)
M6	ONOFF	(NC)	
K6	TEST_MODE	GND	
N12	USB_OTG_CHD_B	(NC)	(USB charger detect)
N7	USB_OTG2_DN	(NC)	
P7	USB_OTG2_DP	(NC)	
P6	USB_OTG2_VBUS	(TP)	
P8	VDD_HIGH_CAP	LDO_2P5	(2.5V internal LDO output)
P12	VDD_HIGH_IN	FMU_VDD_3V3	(3.3V power supply for internal LDOs)
M10	VDD_SNVS_CAP		(1.8V internal LDO output for SNVS domain)

RT1175 Pinout

R17	GPIO_AD_10	SCALED_VDD_3V3_SENSORS1	LPADC1_CH2A
A14	GPIO_DISP_B1_11	ETH_REF_CLK	ENET_1G_REF_CLK + SRC_BT_CFG05
R3	GPIO_EMC_B2_20	ETH_MDIO	ENET_1G_MDIO
H17	GPIO_AD_33	UART10_RX_TELEM3	LPUART10_RXD
P16	GPIO_AD_11	SCALED_VDD_3V3_SENSORS2	LPADC1_CH2B
K2	GPIO_EMC_B2_00	SPI1_SCK_SENSOR1	LPSPI1_SCK
U5	GPIO_LPSR_12	SPI6_MISO_EXTERNAL1	LPSPI6_SIN
E13	GPIO_DISP_B1_00	ETH_CRS_DV	ENET_1G_RX_EN
R8	GPIO_LPSR_07	I2C6_SCL_EXTERNAL2	LPI2C6_SCL
D17	USB1_VBUS	VBUS	USB_OTG1_VBUS
J2	GPIO_EMC_B1_39	SPI2_DRDY1_SENSOR2	TMR2_TIMER1 + GPIO2_IO07
E16	USB1_DN	USB_D_N	USB_OG1_DN
E17	USB1_DP	USB_D_P	USB_OTG1_DP
U7	GPIO_LPSR_15	FMU_SWDIO	SWD_DIO
T6	GPIO_LPSR_14	FMU_SWCLK	SWD_CLK
U8	GPIO_LPSR_08	SPI6_nCS1_EXTERNAL1	LPSPI6_PCS1 + GPIO6_IO08
P17	GPIO_AD_12	SCALED_VDD_3V3_SENSORS3	LPADC1_CH3A + LPADC2_CH3A

L12	GPIO_AD_13	SCALED_V5	LPADC1_CH3B + LPADC2_CH3B
T1	GPIO_EMC_B2_06	SPI3_MOSI_SENSOR3	LPSPI3_SOUT
R5	GPIO_LPSR_10	SPI6_SCK_EXTERNAL1	LPSPI6_SCK (no TRACESWO)
A16	GPIO_SD_B1_05	USDHC1_DATA3	USDHC1_DATA3
K3	GPIO_EMC_B2_02	SPI1_MOSI_SENSOR1	LPSPI1_SOUT
K17	GPIO_AD_30	UART3_TX_GPS1	LPUART3_TXD
J17	GPIO_AD_31	UART3_RX_GPS1	LPUART3_RXD
R15	GPIO_AD_08	I2C1_SCL_GPS1	LPI2C1_SCL
R16	GPIO_AD_09	I2C1_SDA_GPS1	LPI2C1_SDA
T2	GPIO_EMC_B2_17	HEATER	TMR3_TIMER0
B14	GPIO_DISP_B1_10	ETH_TX_EN	ENET_1G_TX_EN + SRC_BT_CFG04
R14	GPIO_AD_01	CAN2_RX	FLEXCAN2_RX
N12	GPIO_AD_00	CAN2_TX	FLEXCAN2_TX
C15	GPIO_SD_B1_02	USDHC1_DATA0	USDHC1_DATA0
B17	GPIO_SD_B1_03	USDHC1_DATA1	USDHC1_DATA1
H5	GPIO_EMC_B1_04	NFC_GPIO	GPIO1_IO04
U2	GPIO_EMC_B2_19	ETH_MDC	ENET_1G_MDC
N14	GPIO_AD_14	ADC_6V6	LPADC1_CH4A + LPADC2_CH4A
N17	GPIO_AD_16	ADC_3V3	LPADC1_CH5A + LPADC2_CH5A
L2	GPIO_EMC_B2_15	ETH_RXD0	ENET_1G_RDATA0
P2	GPIO_EMC_B2_16	ETH_RXD1	ENET_1G_RDATA1
K1	GPIO_EMC_B1_40	UART6_TX_TO_IO__RC_INPUT	LPUART6_TXD
L1	GPIO_EMC_B1_41	UART6_RX_FROM_IO__NC	LPUART6_RXD
P13	GPIO_AD_05	UART8_RTS_TELEM2	LPUART8_RTS_B
M13	GPIO_AD_04	UART8_CTS_TELEM2	LPUART8_CTS_B
M1	GPIO_EMC_B2_04	SPI3_SCK_SENSOR3	LPSPI3_SCK
M3	GPIO_EMC_B2_07	SPI3_MISO_SENSOR3	LPSPI3_SIN
R13	GPIO_AD_02	UART8_TX_TELEM2	LPUART8_TXD
F2	GPIO_EMC_B1_01	VDD_3V3_SD_CARD_EN	GPIO1_IO01
T13	RTC_XTALI	RTC_XTALI	RTC_XTALI
U13	RTC_XTALO	RTC_XTALO	RTC_XTALO
T17	GPIO_AD_07	CAN1_RX	FLEXCAN1_RX
N13	GPIO_AD_06	CAN1_TX	FLEXCAN1_TX
P15	GPIO_AD_03	UART8_RX_TELEM2	LPUART8_RXD
J16	GPIO_AD_34	UART10_CTS_TELEM3	LPUART10_CTS_B
G17	GPIO_AD_35	UART10_RTS_TELEM3	LPUART10_RTS_B
M14	GPIO_AD_15	UART10_TX_TELEM3	LPUART10_TXD
D15	GPIO_SD_B1_01	USDHC1_CLK	USDHC1_CLK
B16	GPIO_SD_B1_00	USDHC1_CMD	USDHC1_CMD
D11	GPIO_DISP_B1_02	UART1_TX_DEBUG	LPUART1_TXD
E11	GPIO_DISP_B1_03	UART1_RX_DEBUG	LPUART1_RXD
E4	GPIO_EMC_B1_03	FMU_nSAFETY_SWITCH_LED_OUT	GPIO1_IO03
F4	GPIO_EMC_B1_05	SPI6_DRDY1_EXTERNAL1	GPIO1_IO05

H3	GPIO_EMC_B1_07	SPI6_DRDY2_EXTERNAL1	GPIO1_IO07
F5	GPIO_EMC_B1_08	FMU_CH5	FLEXPWM2_PWM1_A + FLEXIO1_IO08
A2	GPIO_EMC_B1_10	FMU_CH6	FLEXPWM2_PWM2_A + FLEXIO1_IO10
A3	GPIO_EMC_B1_09	GPIO_EMC_B1_09	GPIO1_IO09
M17	GPIO_AD_29	UART5_RX_GPS2	LPUART5_RXD
L17	GPIO_AD_28	UART5_TX_GPS2	LPUART5_TXD
C6	GPIO_DISP_B2_06	TRACECLK	ARM_TRACE_CLK
E8	GPIO_DISP_B2_00	nLED_RED	GPIO5_IO01 + SRC_BT_CFG06 (no TRACED0)
F8	GPIO_DISP_B2_01	nLED_GREEN	GPIO5_IO02 + SRC_BT_CFG07 (no TRACED1)
D5	GPIO_EMC_B1_13	nLED_BLUE	GPIO1_IO13 (no TRACED2)
B3	GPIO_EMC_B1_17	nARMED	GPIO1_IO17 (no TRACED3)
B1	GPIO_EMC_B1_14	VDD_3V3_SENSORS3_EN	GPIO1_IO14
D10	GPIO_DISP_B1_06	UART4_TX_TELEM1	LPUART4_TXD + SRC_BT_CFG00
B4	GPIO_EMC_B1_18	SPIX_SYNC	TMR2_TIMER0
C11	GPIO_DISP_B1_05	UART4_CTS_TELEM1	LPUART4_CTS_B
C3	GPIO_EMC_B1_20	FMU_CAP1	TMR4_TIMER0
B6	GPIO_DISP_B2_12	SPI4_SCK_SENSOR4	LPSPI4_SCK
A5	GPIO_DISP_B2_13	SPI4_MISO_SENSOR4	LPSPI4_SIN
A7	GPIO_DISP_B2_14	SPI4_MOSI_SENSOR4	LPSPI4_SOUT
C1	GPIO_EMC_B1_15	VDD_5V_PERIPH_nOC	GPIO1_IO15
L16	GPIO_AD_19	I2C2_SDA_GPS2	LPI2C2_SDA
M16	GPIO_AD_18	I2C2_SCL_GPS2	LPI2C2_SCL
K13	GPIO_AD_20	SPI1_DRDY1_SENSOR1	GPIO3_IO19
D3	GPIO_EMC_B1_16	SPI4_DRDY1_SENSOR4	GPIO1_IO16
H2	GPIO_EMC_B1_22	VDD_3V3_SENSORS2_EN	GPIO1_IO22
J5	GPIO_EMC_B1_24	FMU_SAFETY_SWITCH_IN	GPIO1_IO24
E10	GPIO_DISP_B1_04	UART4_RX_TELEM1	LPUART4_RXD
R2	GPIO_EMC_B2_10	FLEXSPI2_SCK_FRAM	FLEXSPI2_A_SCLK
E12	GPIO_DISP_B1_07	UART4_RTS_TELEM1	LPUART4_RTS_B + SRC_BT_CFG01
N3	GPIO_EMC_B2_18	BUZZER_1	TMR3_TIMER1
C2	GPIO_EMC_B1_11	SPI6_nRESET_EXTERNAL1	GPIO1_IO11
K5	GPIO_EMC_B2_13	FLEXSPI2_DATA0_FRAM	FLEXSPI2_A_DATA0
N15	GPIO_AD_17	SCALED_VDD_3V3_SENSORS4	LPADC1_CHB + LPADC2_CH5B
C5	GPIO_EMC_B1_12	VDD_5V_HIPOWER_nOC	GPIO1_IO12
D9	GPIO_DISP_B2_10	I2C3_SCL_FMU	LPI2C3_SCL
A6	GPIO_DISP_B2_11	I2C3_SDA_FMU	LPI2C3_SDA
J3	GPIO_EMC_B1_26	HW_VER_REV_DRIVE	GPIO1_IO26
E5	GPIO_EMC_B1_28	nPOWER_IN_A	GPIO1_IO28
E3	GPIO_EMC_B1_30	nPOWER_IN_B	GPIO1_IO30
D1	GPIO_EMC_B1_32	nPOWER_IN_C	GPIO2_IO00
E1	GPIO_EMC_B1_34	VDD_5V_PERIPH_nEN	GPIO2_IO02

F1	GPIO_EMC_B1_35	I2C2_DRDY1	GPIO2_IO03
L4	GPIO_EMC_B2_11	FLEXSPI2_nCS0_FRAM	FLEXSPI2_A_SS0_B
G1	GPIO_EMC_B1_36	VDD_3V3_SENSORS4_EN	GPIO2_IO04
R1	GPIO_EMC_B2_03	SPI1_MISO_SENSOR1	LPSPI1_SIN
H1	GPIO_EMC_B1_37	VDD_5V_HIPOWER_nEN	GPIO2_IO05
B15	GPIO_SD_B1_04	USDHC1_DATA2	USDHC1_DATA2
A15	GPIO_DISP_B1_08	ETH_TXD1	ENET_1G_TDATA1 + SRC_BT_CFG02
C13	GPIO_DISP_B1_09	ETH_TXD0	ENET_1G_TDATA0 + SRC_BT_CFG03
T5	GPIO_LPSR_11	SPI6_MOSI_EXTERNAL1	LPSPI6_SOUT
B5	GPIO_DISP_B2_08	ETH_POWER_EN	GPIO5_IO09
U16	XTALI	XTALI	XTALI
T16	XTALO	XTALO	XTALO
J1	GPIO_EMC_B1_38	VDD_3V3_SPEKTRUM_POWER_EN	GPIO2_IO06
K12	GPIO_AD_22	HW_VER_SENSE	LPADC2_CH2A
J12	GPIO_AD_23	HW_REV_SENSE	LPADC2_CH2B
M15	GPIO_AD_25	SPI2_nCS0_SENSOR2	LPSPI2_PCS0 + GPIO3_IO24
C4	GPIO_EMC_B1_19	FMU_CH7	FLEXPWM2_PWM3_A + FLEXIO1_IO19
M4	GPIO_EMC_B2_14	FLEXSPI2_DATA1_FRAM	FLEXSPI2_A_DATA1
P8	GPIO_LPSR_06	I2C6_SDA_EXTERNAL2	LPI2C6_SDA
E6	GPIO_EMC_B1_29	FMU_CH8	FLEXPWM3_PWM0_A + FLEXIO1_IO29
H4	GPIO_EMC_B1_06	FMU_CH4	FLEXPWM2_PWM0_A + FLEXIO1_IO06
G5	GPIO_EMC_B1_27	FMU_CH3	FLEXPWM1_PWM2_A + FLEXIO1_IO27
J4	GPIO_EMC_B1_25	FMU_CH2	FLEXPWM1_PWM1_A + FLEXIO1_IO25
N7	GPIO_LPSR_04	UART11_TX_EXTERNAL2	LPUART11_TXD
N8	GPIO_LPSR_05	UART11_RX_EXTERNAL2	LPUART11_RXD
A4	GPIO_DISP_B2_15	SPI4_nCS0_SENSOR4	LPSPI4_PCS0 + GPIO5_IO16
B2	GPIO_EMC_B1_23	FMU_CH1	FLEXPWM1_PWM0_A
L13	GPIO_AD_24	SPI2_SCK_SENSOR2	LPSPI2_SCK
N16	GPIO_AD_27	SPI2_MISO_SENSOR2	LPSPI2_SIN
L14	GPIO_AD_26	SPI2_MOSI_SENSOR2	LPSPI2_SOUT
N1	GPIO_EMC_B2_05	SPI3_nCS0_SENSOR3	LPSPI3_PCS0 + GPIO2_IO15
M2	GPIO_EMC_B2_12	FMU_PPM_INPUT	TMR1_TIMER3
K14	GPIO_AD_21	SPI3_DRDY1_SENSOR3	GPIO3_IO20
N2	GPIO_EMC_B2_09	SPI3_DRDY2_SENSOR3	GPIO2_IO19
P1	GPIO_EMC_B2_08	SPI3_nCS1_SENSOR3	LPSPI3_PCS1 + GPIO2_IO18
K4	GPIO_EMC_B2_01	SPI1_nCS0_SENSOR1	LPSPI1_PCS0 + GPIO2_IO11
P5	GPIO_LPSR_09	SPI6_nCS0	LPSPI6_PCS0 + GPIO6_IO09
E2	GPIO_EMC_B1_33	VDD_3V3_SENSORS1_EN	GPIO2_IO01
P6	GPIO_LPSR_02	BT_MODE0	SRC_BOOT_MODE00
T7	GPIO_LPSR_03	BT_MODE1	SRC_BOOT_MODE01
U6	GPIO_LPSR_13	NC_JTAG_MOD_PD	JTAG_MOD

R6	GPIO_LPSR_01	CAN3_RX	FLEXCAN3_RX
D13	GPIO_DISP_B1_01	ETH_RX_ER	ENET_1G_RX_ER
K16	GPIO_AD_32	USDHC1_CD	USDHC1_CD_B / GPIO3_IO31
N6	GPIO_LPSR_00	CAN3_TX	FLEXCAN3_TX
J15	GPIO_SD_B2_00	FLEXSPI1_DATA7_HYPERFLASH	FLEXSPI1_B_DATA3
J14	GPIO_SD_B2_01	FLEXSPI1_DATA6_HYPERFLASH	FLEXSPI1_B_DATA2
H13	GPIO_SD_B2_02	FLEXSPI1_DATA5_HYPERFLASH	FLEXSPI1_B_DATA1
E15	GPIO_SD_B2_03	FLEXSPI1_DATA4_HYPERFLASH	FLEXSPI1_B_DATA0
F14	GPIO_SD_B2_04	FLEXSPI1_nSCK_HYPERFLASH	FLEXSPI1_B_SCLK
E14	GPIO_SD_B2_05	FLEXSPI1_DQS_HYPERFLASH	FLEXSPI1_A_DQS
F17	GPIO_SD_B2_06	FLEXSPI1_nCS0_HYPERFLASH	FLEXSPI1_A_SS0_B
G14	GPIO_SD_B2_07	FLEXSPI1_SCK_HYPERFLASH	FLEXSPI1_A_SCLK
F15	GPIO_SD_B2_08	FLEXSPI1_DATA0_HYPERFLASH	FLEXSPI1_A_DATA0
H15	GPIO_SD_B2_09	FLEXSPI1_DATA1_HYPERFLASH	FLEXSPI1_A_DATA0
H14	GPIO_SD_B2_10	FLEXSPI1_DATA2_HYPERFLASH	FLEXSPI1_A_DATA2
F16	GPIO_SD_B2_11	FLEXSPI1_DATA3_HYPERFLASH	FLEXSPI1_A_DATA3
E9	GPIO_DISP_B2_02	TRACED0	SRC_BT_CFG08 + ARM_TRACE0
D7	GPIO_DISP_B2_03	TRACED1	SRC_BT_CFG09 + ARM_TRACE1
C7	GPIO_DISP_B2_04	TRACED2	SRC_BT_CFG10 + ARM_TRACE2
C9	GPIO_DISP_B2_05	TRACED3	SRC_BT_CFG11 + ARM_TRACE3
D6	GPIO_DISP_B2_07	TRACESWO	ARM_TRACE_SWO
D8	GPIO_DISP_B2_09	ETH_PHY_nINT	GPIO5_IO10
F3	GPIO_EMC_B1_00	FMU_CH11	FLEXPWM4_PWM0_A + FLEXIO1_IO00
G4	GPIO_EMC_B1_02	FMU_CH12	FLEXPWM4_PWM1_A + FLEXIO1_IO02
G2	GPIO_EMC_B1_21	FMU_CH10	FLEXPWM3_PWM3_A + FLEXIO1_IO21
D2	GPIO_EMC_B1_31	FMU_CH9	FLEXPWM3_PWM1_A + FLEXIO1_IO31
T10	POR_B	FMU_nRST	(power on reset)
U12	VDD_SNVS_IN	V_RTC_BAT	(3V power supply for SNVS domain)
H8	VDD_SOC_IN	VDD_SOC_IN	(1.15V power supply for digital core)
J8	VDD_SOC_IN	VDD_SOC_IN	(1.15V power supply for digital core)
H9	VDD_SOC_IN	VDD_SOC_IN	(1.15V power supply for digital core)
J9	VDD_SOC_IN	VDD_SOC_IN	(1.15V power supply for digital core)
H10	VDD_SOC_IN	VDD_SOC_IN	(1.15V power supply for digital core)
J10	VDD_SOC_IN	VDD_SOC_IN	(1.15V power supply for digital core)
K10	VDD_SOC_IN	VDD_SOC_IN	(1.15V power supply for digital core)

J13	VDDA_ADC_3P3	FMU_VDDA_3V3_FILT	(3.3V power supply for ADC, DAC and ACMP)
D14	NVCC_SD1	FMU_VDD_3V3	(3.3V power supply for GPIO_SD_B1 bank - USDHC)
G12	VDD_USB_3P3	FMU_VDD_3V3	(3.3V power supply for USB OTG PHYs)
G16	ADC_VREFH	DCDC_1V8_OUT	(1.8V reference voltage for ADC, DAC and ACMP)
A1	VSS	GND	
U1	VSS	GND	
G3	VSS	GND	
L3	VSS	GND	
H7	VSS	GND	
J7	VSS	GND	
D4	VSS	GND	
P4	VSS	GND	
R4	VSS	GND	
B7	VSS	GND	
G7	VSS	GND	
R7	VSS	GND	
C8	VSS	GND	
G8	VSS	GND	
G9	VSS	GND	
C10	VSS	GND	
G10	VSS	GND	
L10	VSS	GND	
F11	VSS	GND	
G11	VSS	GND	
H11	VSS	GND	
J11	VSS	GND	
K11	VSS	GND	
L11	VSS	GND	
C12	VSS	GND	
F12	VSS	GND	
T12	VSS	GND	
F13	VSS	GND	
C14	VSS	GND	
P14	VSS	GND	
G15	VSS	GND	
L15	VSS	GND	
A17	VSS	GND	
U17	VSS	GND	

T15	CLK1_N	(NC)	
U15	CLK1_P	(NC)	
K6	DCDC_GND	GND	
L6	DCDC_GND	GND	
M5	DCDC_IN	FMU_VDD_3V3	(3.3V power supply for internal DCDC converter)
N5	DCDC_IN	FMU_VDD_3V3	(3.3V power supply for internal DCDC converter)
L5	DCDC_IN_Q	FMU_VDD_3V3	(3.3V power supply for internal DCDC converter)
K8	DCDC_DIG	VDD_SOC_IN	(1.15V internal DCDC converter output)
L8	DCDC_DIG	VDD_SOC_IN	(1.15V internal DCDC converter output)
P3	DCDC_PSWITCH	(30k pull up)	(power switch for internal DCDC converter)
L7	DCDC_DIG_SENSE	VDD_SOC_IN	(1.15V internal DCDC converter sense feedback)
F6	NVCC_EMC1	FMU_VDD_3V3	(3.3V power supply for GPIO_EMC_B1 bank)
G6	NVCC_EMC1	FMU_VDD_3V3	(3.3V power supply for GPIO_EMC_B1 bank)
D12	NVCC_DISP1	FMU_VDD_3V3	(3.3V power supply for GPIO_DISP_B1 bank)
E7	NVCC_DISP2	FMU_VDD_3V3	(3.3V power supply for GPIO_DISP_B2 bank)
M12	NVCC_GPIO	FMU_VDD_3V3	(3.3V power supply for GPIO_AD bank)
N11	VDDA_1P0	VDDA_1P0	(1.0V internal LDO output for PLL)
G13	NVCC_SD2	VDD_1V8_FLASH	(1.8V power supply for GPIO_SD_B2 bank - HyperFlash)
U10	ONOFF	(NC)	
T11	TEST_MODE	GND	
C16	USB2_DN	(NC)	
C17	USB2_DP	(NC)	
D16	USB2_VBUS	(NC)	
P12	VDD_LPSR_ANA	VDD_LPSR_ANA	(1.8V internal LDO output for LPSR domain)
R12	VDD_LPSR_IN	FMU_VDD_3V3	(3.3V power supply for LPSR domain)
U14	VDD_SNVS_ANA	VDD_SNVS_ANA	(1.75V internal LDO output for SNVS domain)
H16	DAC_OUT	(NC)	
M7	DCDC_ANA	DCDC_1V8_OUT	(1.8V internal DCDC converter output)
M8	DCDC_ANA	DCDC_1V8_OUT	(1.8V internal DCDC converter output)
M6	DCDC_ANA_SENSE	DCDC_1V8_OUT	(1.8V internal DCDC converter sense feedback)
K9	DCDC_DIG	VDD_SOC_IN	(1.15V internal DCDC converter output)

K7	DCDC_GND	GND	
T4	DCDC_LN	(external inductor)	(external inductor for internal DCDC converter)
U4	DCDC_LN	(external inductor)	(external inductor for internal DCDC converter)
T3	DCDC_LP	(external inductor)	(external inductor for internal DCDC converter)
U3	DCDC_LP	(external inductor)	(external inductor for internal DCDC converter)
N4	DCDC_MODE	(4k7 pull down)	
R10	GPIO_SNVS_00	(NC)	
P10	GPIO_SNVS_01	(NC)	
L9	GPIO_SNVS_02	(NC)	
M10	GPIO_SNVS_03	(NC)	
N10	GPIO_SNVS_04	(NC)	
P9	GPIO_SNVS_05	(NC)	
M9	GPIO_SNVS_06	(NC)	
R9	GPIO_SNVS_07	(NC)	
N9	GPIO_SNVS_08	(NC)	
R11	GPIO_SNVS_09	(NC)	
A12	MIPI_CSI_CKN	(NC)	
B12	MIPI_CSI_CKP	(NC)	
A11	MIPI_CSI_DN0	(NC)	
A13	MIPI_CSI_DN1	(NC)	
B11	MIPI_CSI_DP0	(NC)	
B13	MIPI_CSI_DP1	(NC)	
A9	MIPI_DSI_CKN	(NC)	
B9	MIPI_DSI_CKP	(NC)	
A8	MIPI_DSI_DN0	(NC)	
A10	MIPI_DSI_DN1	(NC)	
B8	MIPI_DSI_DP0	(NC)	
B10	MIPI_DSI_DP1	(NC)	
F7	NVCC_EMC1	FMU_VDD_3V3	(3.3V power supply for GPIO_EMC_B1 bank)
H6	NVCC_EMC2	FMU_VDD_3V3	(3.3V power supply for GPIO_EMC_B2 bank)
J6	NVCC_EMC2	FMU_VDD_3V3	(3.3V power supply for GPIO_EMC_B2 bank)
P7	NVCC_LPSR	FMU_VDD_3V3	(3.3V power supply for GPIO_LPSR bank)
U11	NVCC_SNVS	VDD_SNVS_ANA	(1.8V power supply for GPIO_SNVS bank)
U9	PMIC_ON_REQ	(NC)	
T9	PMIC_STBY_REQ	(NC)	
P11	VDD_LPSR_DIG	VDD_LPSR_DIG	(1.0V internal LDO output for LPSR domain)
F10	VDD_MIPI_1P0	(10k pull down)	(1.0V power supply for MIPI CSI/DSI PHY)
F9	VDD_MIPI_1P8	(10k pull down)	(1.8V power supply for MIPI CSI/DSI PHY)
T14	VDD_SNVS_DIG	VDD_SNVS_DIG	(0.85V internal LDO output for SNVS domain)

H12	VDD_USB_1P8	VDD_1V8_FLASH	(1.8V power supply for USB OTG PHYs)
M11	VDDA_1P8_IN	DCDC_1V8_OUT	(1.8V power supply for PLL, OSC and LDOs)
K15	VDDA_ADC_1P8	DCDC_1V8_OUT	(1.8V power supply for ADC, DAC and ACMP)
T8	WAKEUP	(NC)	